Electrolux

Front Load Washers

EWFLS70J RR/MB/TS/SS/IW

Wave-Touch® Electronic Controls Featuring Perfect Steam™

ENERGY STAR

Turquoise Sky
EWFLS70J TS

Red Hot Red

Mediterranean Blue

Turquoise Sky

Silver Sands

Island White

Optional Luxury-Glide® Touch-2-Open™ Pedestals Shown in Available Colors.

Largest Capacity Washer[1]

Wash the most in one load with our 4.42 cu. ft. (D.O.E.)/5.1 cu. ft. (I.E.C.) washer.

Fastest Wash Time[2]

Fifteen minutes to wash.

Specialty Cycles

Clean all your special items including pet beds, stuffed animals, wool and more.

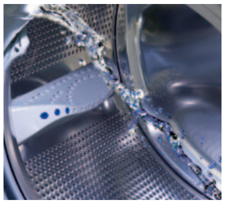

Cleanest Front Load Wash[3]

Our front load washer offers exclusive technology that gets your clothes the cleanest.

NSF

[1] Based on manufacturer's specifications. Volume per I.E.C. Int'l Std. 60456, 4th ed. based on 4.42 cu. ft. D.O.E. measurement.

[2] Fastest time based on smallest load/Fast Wash and Fast Dry cycles selected for various load compositions.

[3] Based on AHAM washability test protocol for leading brand front load washers with normal cycle times less than 60 minutes.

27" ELECTRIC FRONT LOAD WASHERS

Capacity D.O.E./I.E.C. (Cu. Ft.)	4.42 / 5.1
Features	
Wave-Touch® Electronic Controls with LCD Display	Yes
Perfect Steam™ Wash System	Yes
Perfect Balance® System	Yes
Luxury-Quiet™ Sound System	Yes
Luxury-Design® Lighting	Yes
Touch-2-Open™/(Close) Door	Yes
Luxury-Glide® Touch-2-Open™/(Close) Dispenser Drawer	Yes
Full Fabric Stain Removal Guide	Yes
ExpertCare™ Wash System	Yes
Integral Water Heater	Yes
Stainless Steel Wash Drum	Yes
Automatic Temperature Control	Yes
Automatic Water Level Adjustment	Yes
Auto Prewash Detergent Dispenser (Liquid/Powder)	Yes
Auto Bleach Dispenser (Liquid Only)	Yes
Auto Detergent Dispenser (Liquid/Powder)	Yes
Auto Fabric Softener Dispenser (Liquid Only)	Yes
Tumble Speed (RPM)	48-52 Variable
Spin Speed (RPM)	1,400
Reversible Door	Yes
ENERGY STAR®	Yes
NSF® Certified	Sanitize/Allergen
Cycles	
Fast Wash*, My Favorites (3), Deep Clean Sanitize*, Heavy Duty*, Whites*, Colors*, Normal*, Active Wear*, Casual*, Delicates, Hand Wash, Rinse/Spin Only (*Can be used with Add Steam option)	14
Specialty Cycles – Jeans, Fast Sanitize, Stuffed Animals*, Pet Beds*, Clean Washer, Steam Prewash*, Kids Wear*, Fast Steam*, Wool (*Can be used with Add Steam option)	9
Individual Custom Options (3) – Additional user settings, each with 11 cycles, 9 Specialty and 3 My Favorites (23)	69
Total Cycles Available	92
Options	
Wash/Rinse Temperature Combinations	9
Temperature Selections	6
Add Steam	8
Spin Speed Selections	6
Soil Level Selections	6
Delay Start (Hours)	22
End-of-Cycle Chime	Adjustable
Installation Options	
Freestanding, Under Counter*, Stacked (Under Dryer), Pedestal, Hidden (In Closet), Second Floor	Yes
Accessories	
Luxury-Glide® Touch-2-Open™/(Close) Pedestal – See Back for Part Numbers	Optional
Dryer Stacking Kit – PN# ESTACKIT	Optional
Drain Hose Extension Kit – PN# 137098000	Optional
Mobile Home Installation Kit – PN# 137067200	Optional
Specifications	
Color –	
Red Hot Red	RR
Mediterranean Blue	MB
Turquoise Sky	TS
Silver Sands	SS
Island White	IW
Product Dimensions –	
Height (Without 15" Pedestal / With 15" Pedestal)	38"/53"
Width	27"
Depth (to Center of Arc Not Including Hose) (with 90° Door Open)	31-1/2" 50-5/8"
Power Supply / Water Inlet Location	Top Right Rear / Top Left Rear
Voltage Rating	120V/60Hz/15A
Connected Load (kW Rating) @ 120 Volts‡	1.4
Watts @ 120 Volts	1,000
Amps @ 120 Volts	12
Shipping Weight (Approx.)	247 Lbs.

**Side-by-Side units in under-counter installation require custom-built countertop and/or cabinetry.*

‡For use on adequately wired 120V, dedicated circuit having 2-wire service with a separate ground wire. Appliance must be grounded for safe operation.

NOTE: Always consult local and national electric & plumbing codes. Refer to Product Installation Guide for detailed installation instructions on the web at www.electroluxappliances.com.

Specifications subject to change.

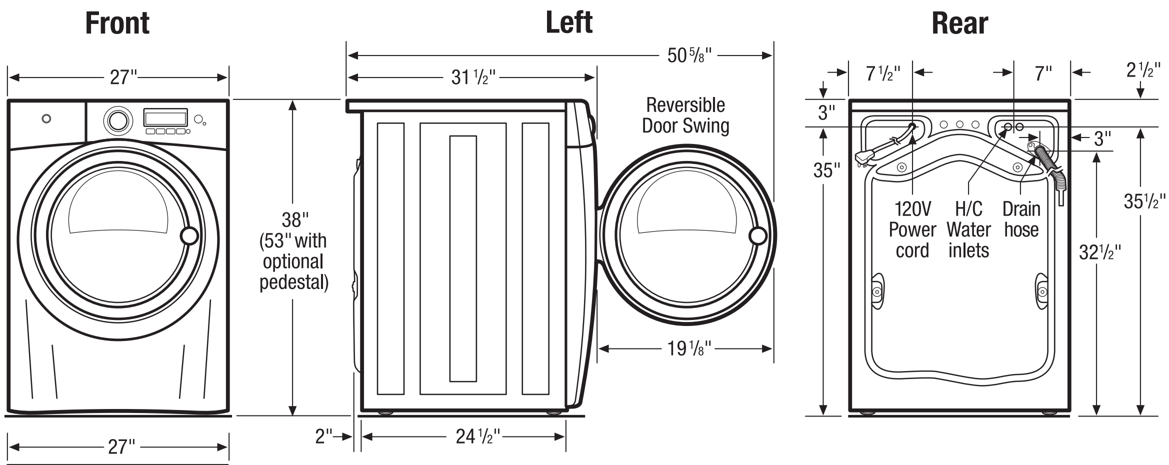

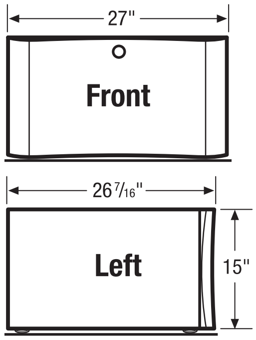

15" Drawer Pedestal Installation

Elevates dryer height to 53". For detailed pedestal installation, refer to instructions included with pedestal or on web. **Note:** Pedestal Installation requires modified utility hookup locations. For details, refer to Product Installation Guide on web.

Built-In Installations

For built-in installations, NO minimum clearance required around sides and backs of units. *(Steam dryers only will require 3/4" steam hose clearance at back of unit.)* For closet installation, allow 1" clearance between fronts of units and door. Location of plumbing, exhaust and utility hookups MUST be considered in built-in installations. For additional installation details, refer to Product Installation Guides on web.

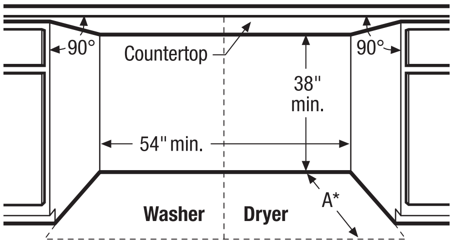

Side-by-Side Units in Under-Counter Installation

Requires custom-built countertop and/or cabinetry.

A - 31 1/2" (with non-steam dryer) / 32 1/4" (with steam dryer)

* To achieve minimal depth dimensions or clearances, dryer MUST be vented straight back or with quick-turn 90° elbow.

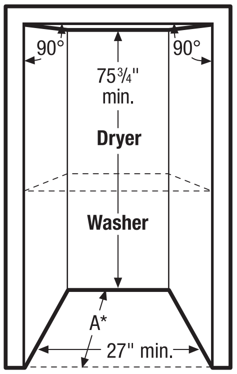

Stacked Units in Recessed or Closet Installation

For detailed stacked installation, refer to instructions included with Stacking Kit or on web. **Note:** Stacked installation requires modified utility hookup locations for dryer. For details, refer to Product Installation Guide on web.

Front Load Washer Specifications

- Product Weight – 237 Lbs.
- An electrical supply with grounded three-prong receptacle is required. The power supply circuit must be installed in accordance with current edition of National Electrical Code (ANSI/NFPA 70) and local codes & ordinances. *(Do not use same circuit as dryer.)*
- Voltage Rating – 120V/60Hz/15 Amps
- Amps @120 Volts = 12 Amps
- Connected Load (kW Rating) @120 Volts = 1.4kW
- Equipped with 120V 3-wire power supply cord, approx. 60" long.
- Always consult local and national electric & plumbing codes.
- To maximize detergent effectiveness, ambient temperature should never be below 60°F.
- Can be installed alone, with or without optional 15" drawer pedestal, or stacked beneath matching Electrolux Dryer, which requires installation of optional dryer stacking kit. *(For installation details, refer to instructions included with optional pedestal or stacking kit or on web.)*
- Can be built in with matching Electrolux Dryer in under-counter, recessed or closet installation. Installations requiring countertop and/or cabinetry will require custom building. *(Refer to Built-In Installations on this page for cutout dimensions. For additional installation details, refer to Product Installation Guide on web.)*
- Closet installation requires vented door with 2 unobstructed louvered openings, minimum 60 sq.in. each, located 3" from top and bottom of door. Full-length 120 sq.in. opening also acceptable. Allow 1" clearance between door and fronts of units.
- Do NOT install in area exposed to dripping water or outdoor weather conditions, or where gasoline or other flammables, including automobiles, are kept or stored.
- Floor MUST be solid with 1" maximum slope. To ensure vibration or movement does not occur, reinforcement of floor may be necessary. Do NOT install on carpeted surface.
- Leveling legs supplied to level washer properly and reduce excessive noise and vibration.
- H/C water faucets MUST be installed within 42" of washer's water inlet and MUST be 3/4" garden hose type, to connect to 48-1/2" inlet hoses.
- Water pressure MUST be between 30 and 120 psi with NOT more than 10 psi pressure difference between hot and cold.
- Drain required with standpipe diameter of 1-1/4" min. and height of 24" min./96" max. above floor, capable of eliminating 17 gallons per minute. Attached 59" drain hose can reach 79"-high standpipe.

Note: For planning purposes only. Refer to Product Installation Guide on the web at electroluxappliances.com for detailed instructions.

Optional Accessories

- Drawer Pedestals – Red Hot Red (PN# EPWD15RR), Mediterranean Blue (PN# EPWD15MB), Turquoise Sky (PN# EPWD15TS), Silver Sands (PN# EPWD15SS), Island White (PN# EPWD15IW).
- Dryer Stacking Kit – (PN# ESTACKIT).
- Drain Hose Extension Kit – (PN# 137098000).
- Mobile Home Installation Kit – (PN# 137067200).

c UL US

Electrolux Major Appliances, N.A.

USA • 10200 David Taylor Drive • Charlotte, NC 28262 • 1-877-4electrolux (1-877-435-3287) • electroluxappliances.com
CANADA • 5855 Terry Fox Way • Mississauga, ON L5V 3E4 • 1-800-265-8352 • electroluxappliances.ca

High standards of quality at Electrolux Home Products, Inc. mean we are constantly working to improve our products. We reserve the right to change specifications or discontinue models without notice.

© 2011 Electrolux Home Products, Inc.

Printed in the U.S.A.